Z0303V10

SunFounder Pironman Case

Get tutorial at: pironman.rtfd.io

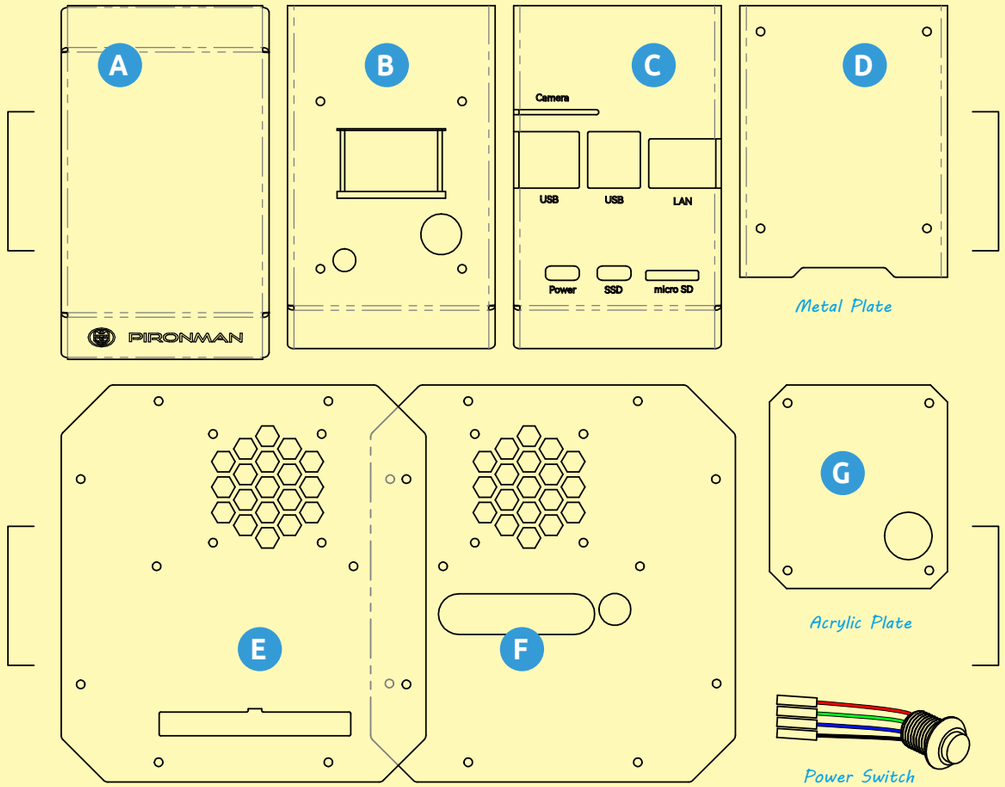

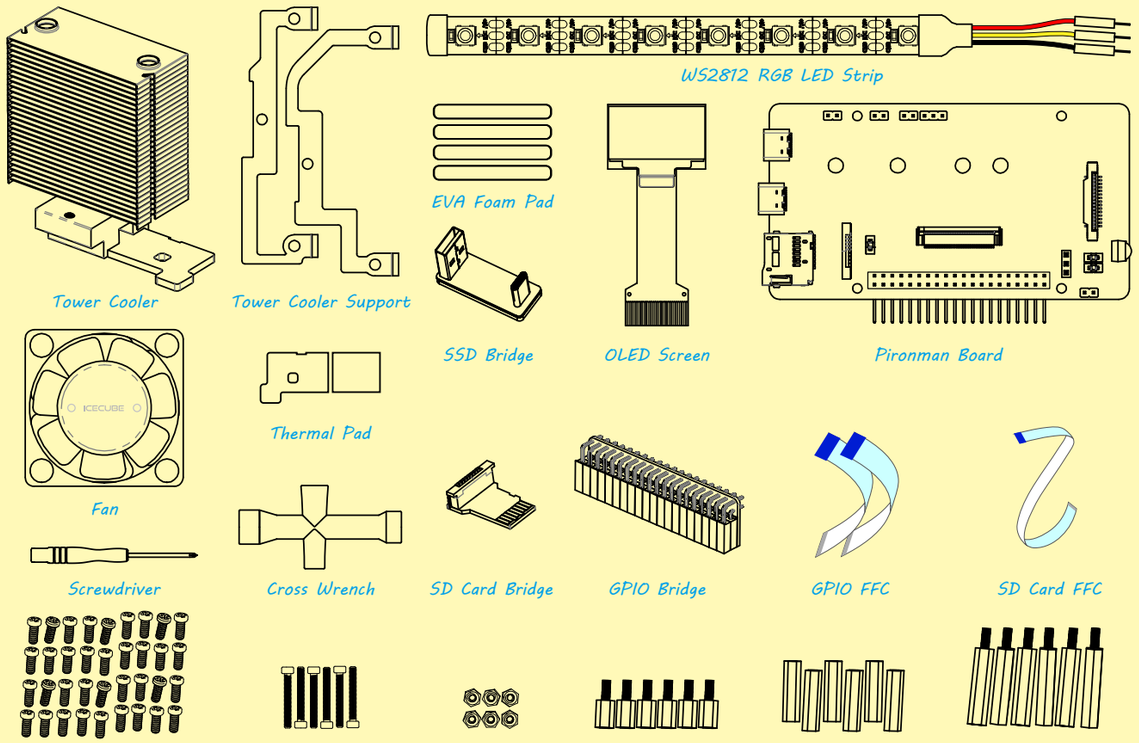

Assemble

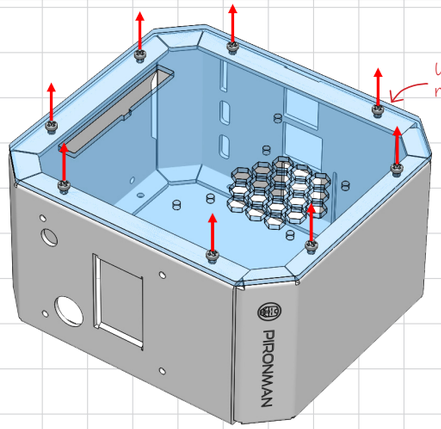

Step 1

After unboxing, you'll find that part of the Pironman Case is already assembled, and you'll need to take it apart.

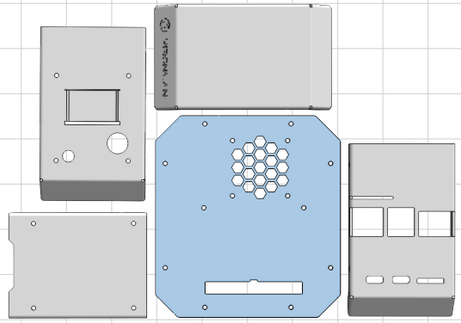

Step 2

Then, you get four metal plates and one acrylic plate. Put them aside for future use.

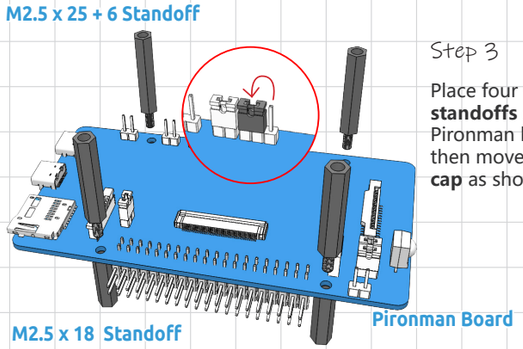

Step 3

Place four sets of **standoffs** on the Pironman board, and then move the **jumper cap** as shown.

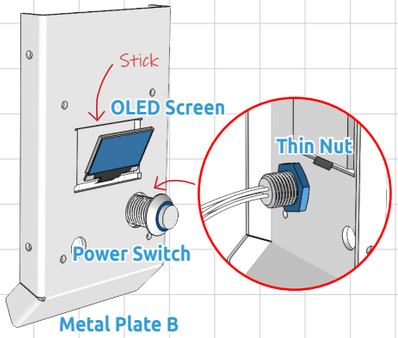

Step 4

Put the **OLED Screen** and **Power Switch** through **Metal Plate B**.

The Power Switch has a thin nut that you need to remove in advance and use to secure it afterward.

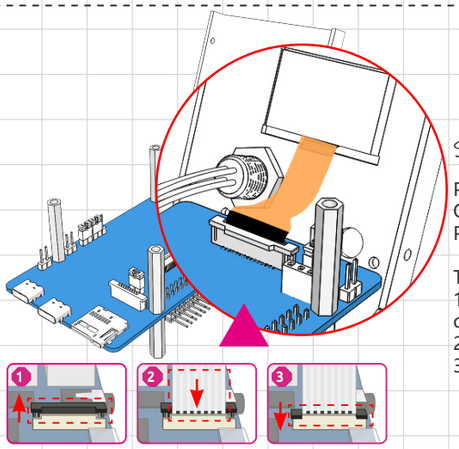

Step 5

Put in the FPC of the OLED Screen into the Pironman board.

The steps are:
1) Pull up the black connector arms.
2) Insert the FFC cable.
3) Push to fasten.

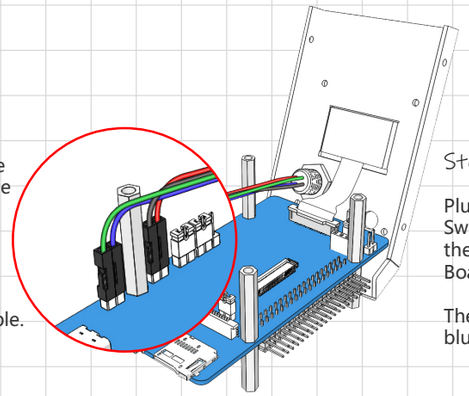

Step 6

Plug the Power Switch's wire into the Pironman Board.

The order is green blue black red.

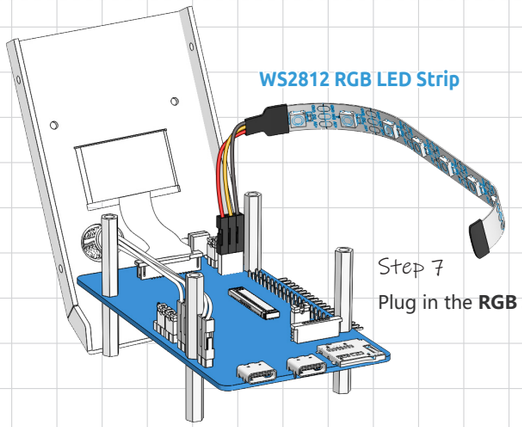

Step 7

Plug in the **RGB Strip**.

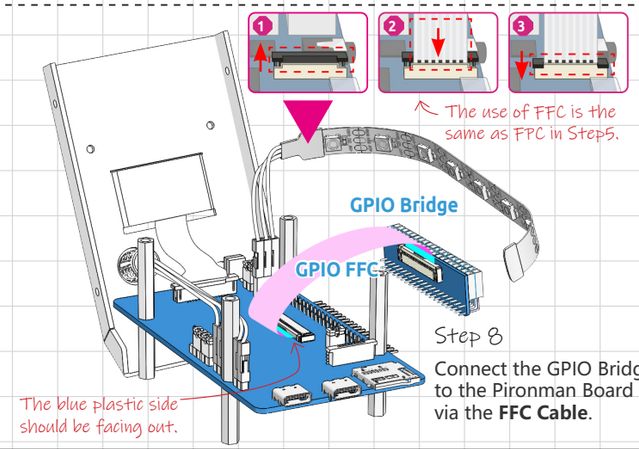

Step 8

Connect the GPIO Bridge to the Pironman Board via the **FFC Cable**.

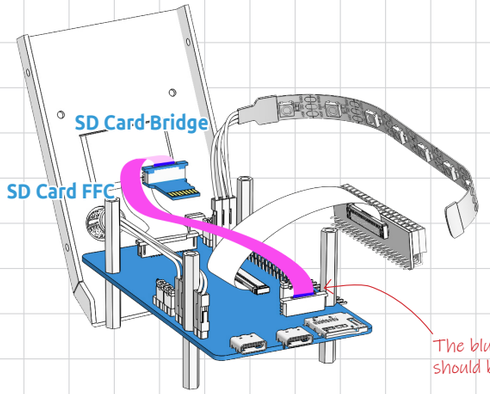

Step 9

Connect the SD Card Bridge to the Pironman Board via **FFC Cable**.

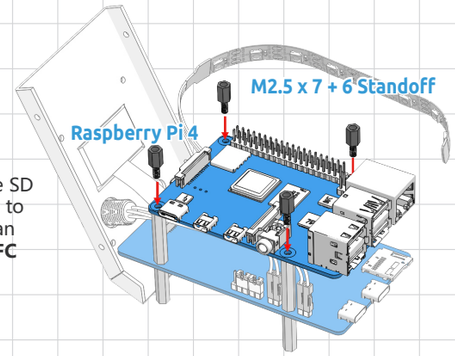

Step 10

With 4 **standoffs**, mount the **Raspberry Pi 4** on the Pironman board.

Crosswrench is a good tool to use in this step.

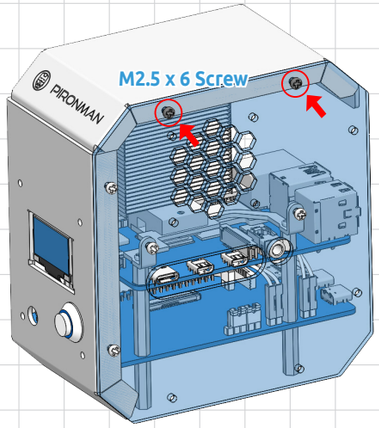

Step 17

Secure the **Metal Plate A**.

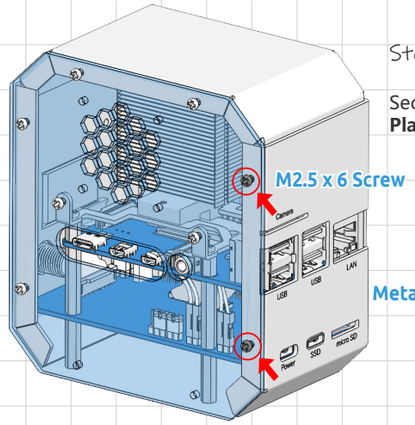

Step 18

Secure the **Metal Plate C**.

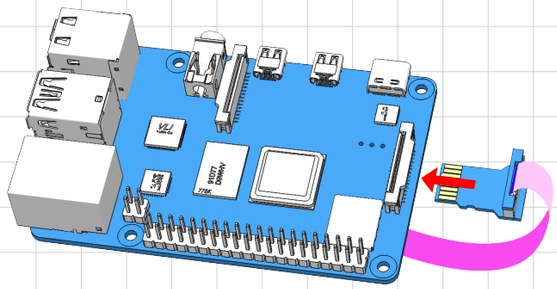

Step 11

Insert the SD Card Bridge into Raspberry Pi 4.

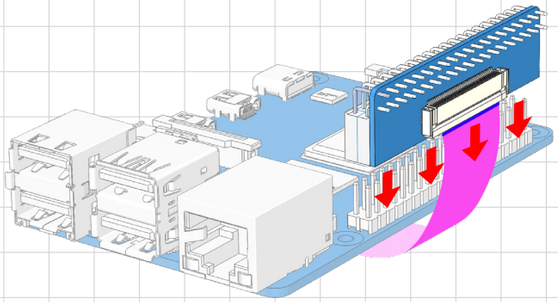

Step 12

Plug the GPIO Bridge into Raspberry Pi 4.

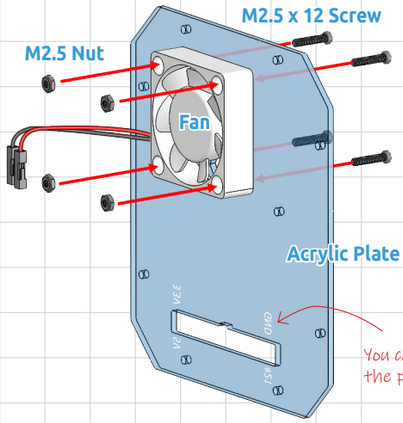

Step 19

Assemble the **Fan** to the back of **Acrylic Plate E**.

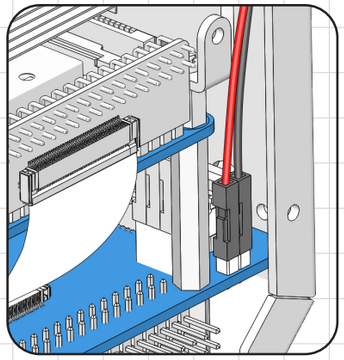

Step 20

Plug in the Fan cable as shown.

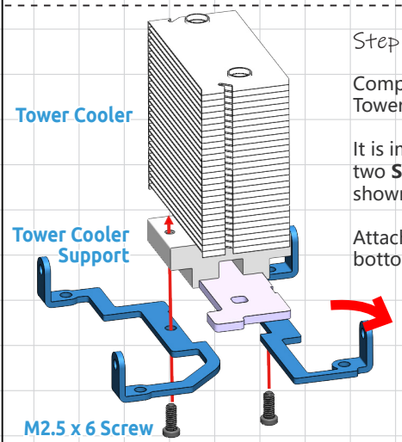

Step 13

Complete the assembly of the Tower Cooler.

It is important to assemble the two **Supports** in the direction shown in the figure.

Attach a **Thermal Pad** on the bottom.

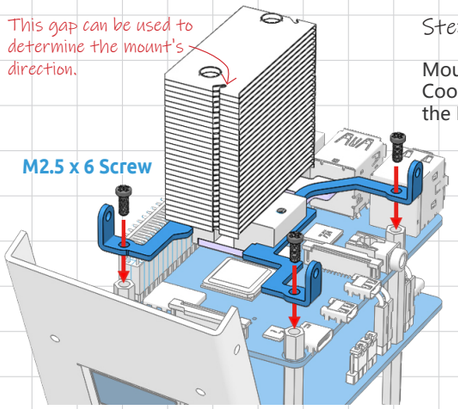

Step 14

Mount the Tower Cooler on top of the Raspberry Pi.

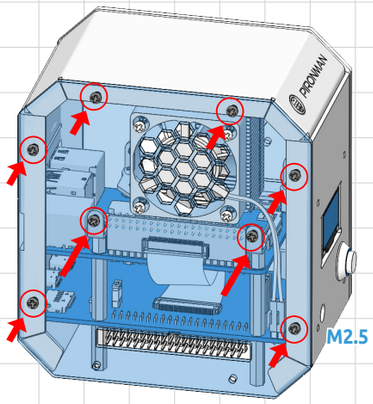

Step 21

Secure the **Acrylic Plate E**.

Please note the direction of the Acrylic plate and screw in the middle screws first.

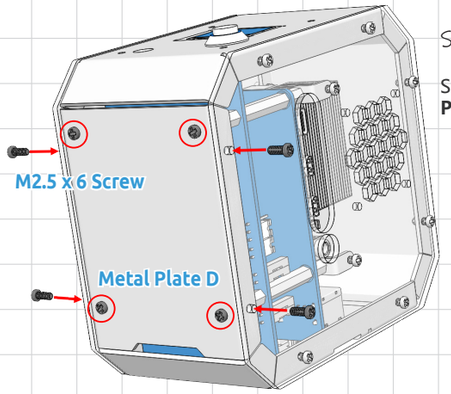

Step 22

Secure the **Metal Plate D**.

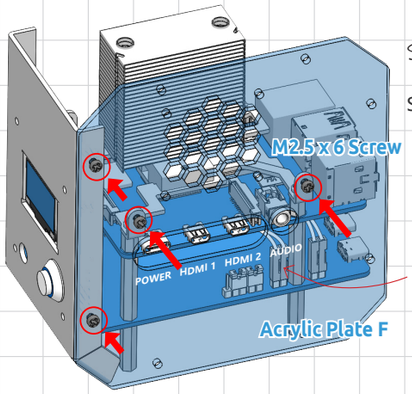

Step 15

Secure the **Acrylic Plate F**.

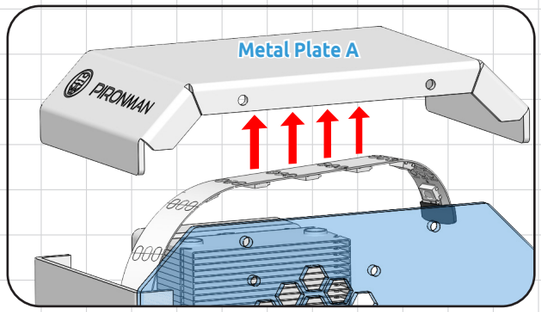

Step 16

The **RGB strip** should be pasted to the bottom of the **Metal Plate A**.

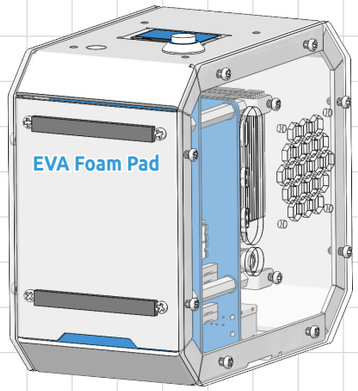

Step 23

Stick two non-slip **Pads** on the bottom.

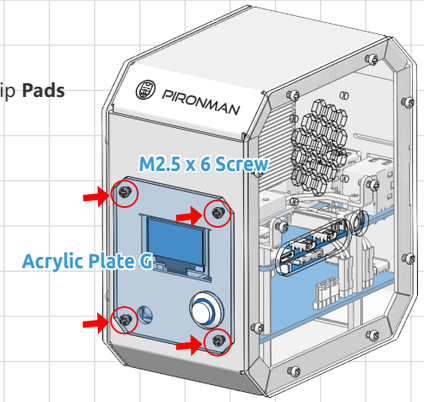

Step 24

Secure the **Acrylic Plate G**.